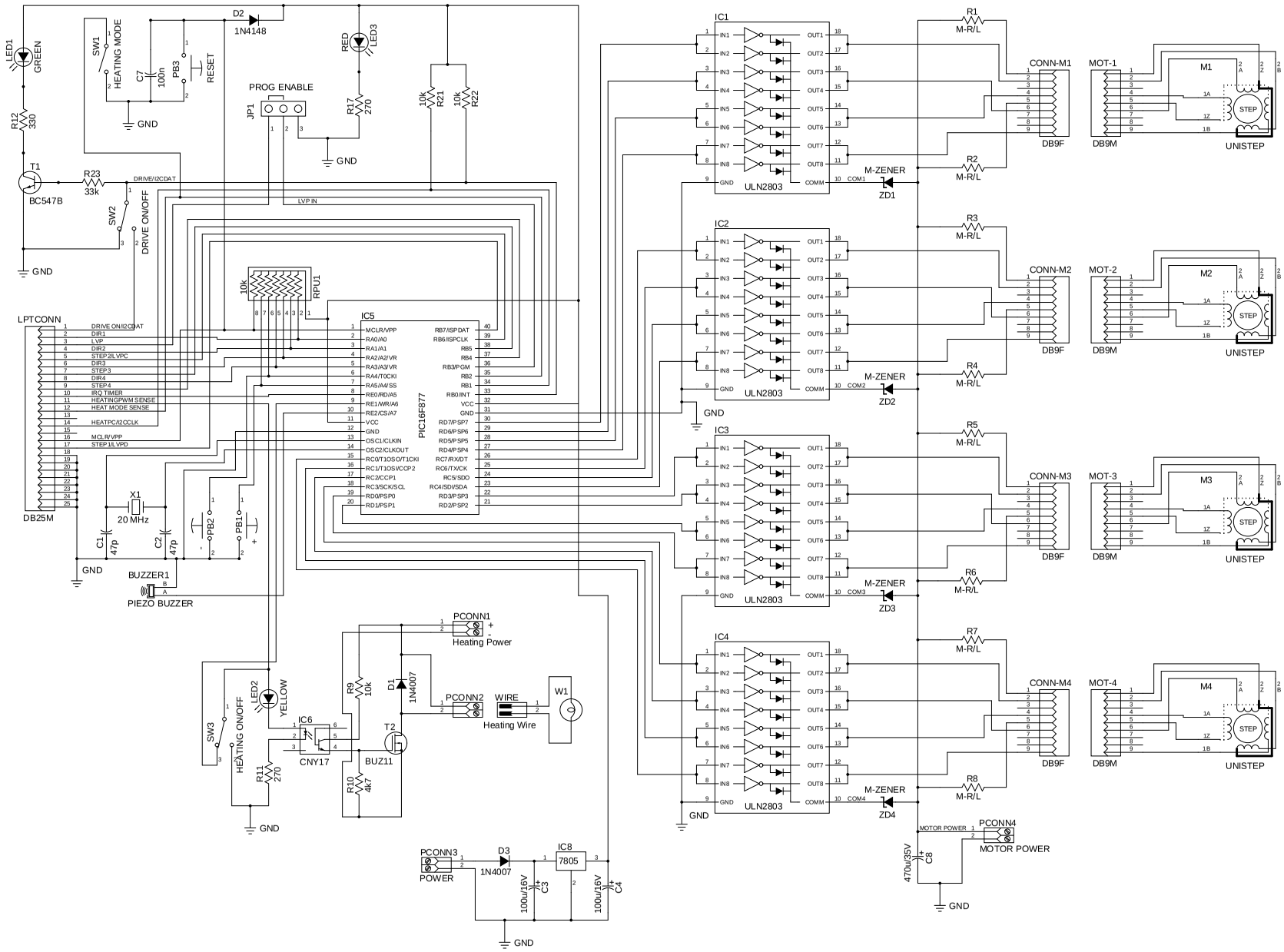
LED1
GREEN
R12
330
T1
BC547B
R23
33k
SW1
HEATING MODE
C7
100n
PB3
RESET
D2
1N4148
RED
LED3
R17
270
PROG ENABLE
JP1
10k
R21
10k
R22
GND
DRIVE/I2CDAT
LVP IN
SW2
DRIVE ON/OFF
10k
RPU1
LPTCONN
DB25M
DRIVE ON/I2CDAT
DIR1
LVP
DIR2
STEP2/LVPC
DIR3
STEP3
DIR4
STEP4
IRQ TIMER
HEATINGPWM SENSE
HEAT MODE SENSE
HEATPC/I2CCLK
MCLR/VPP
STEP1/LVPD
IC5
PIC16F877
MCLR/VPP
RA0/A0
RA1/A1
RA2/A2/VR
RA3/A3/VR
RA4/T0CKI
RA5/A4/SS
RE0/RD/A5
RE1/WR/A6
RE2/CS/A7
VCC
GND
OSC1/CLKIN
OSC2/CLKOUT
RC0/T1OSO/T1CKI
RC1/T1OSI/CCP2
RC2/CCP1
RC3/SCK/SCL
RD0/PSP0
RD1/PSP1
RB7/ISPDAT
RB6/ISPCLK
RB5
RB4
RB3/PGM
RB2
RB1
RB0/INT
VCC
GND
RD7/PSP7
RD6/PSP6
RD5/PSP5
RD4/PSP4
RC7/RX/DT
RC6/TX/CK
RC5/SDO
RC4/SDI/SDA
RD3/PSP3
RD2/PSP2
X1
20 MHz
C1
47p
C2
47p
PB2
PB1
BUZZER1
PIEZO BUZZER
PCONN1
Heating Power
PCONN2
WIRE
Heating Wire
W1
D1
1N4007
R9
10k
IC6
CNY17
T2
BUZ11
R10
4k7
R11
270
SW3
HEATING ON/OFF
LED2
YELLOW
PCONN3
POWER
D3
1N4007
IC8
7805
100u/16V
C3
100u/16V
C4
IC1
IC2
IC3
IC4
ULN2803
IN1
IN2
IN3
IN4
IN5
IN6
IN7
IN8
GND
OUT1
OUT2
OUT3
OUT4
OUT5
OUT6
OUT7
OUT8
COMM
COM1
COM2
COM3
COM4
M-ZENER
ZD1
ZD2
ZD3
ZD4
R1
R2
R3
R4
R5
R6
R7
R8
M-R/L
CONN-M1
CONN-M2
CONN-M3
CONN-M4
DB9F
MOT-1
MOT-2
MOT-3
MOT-4
DB9M
M1
M2
M3
M4
STEP
UNISTEP
MOTOR POWER
PCONN4
MOTOR POWER
470u/35V
C8